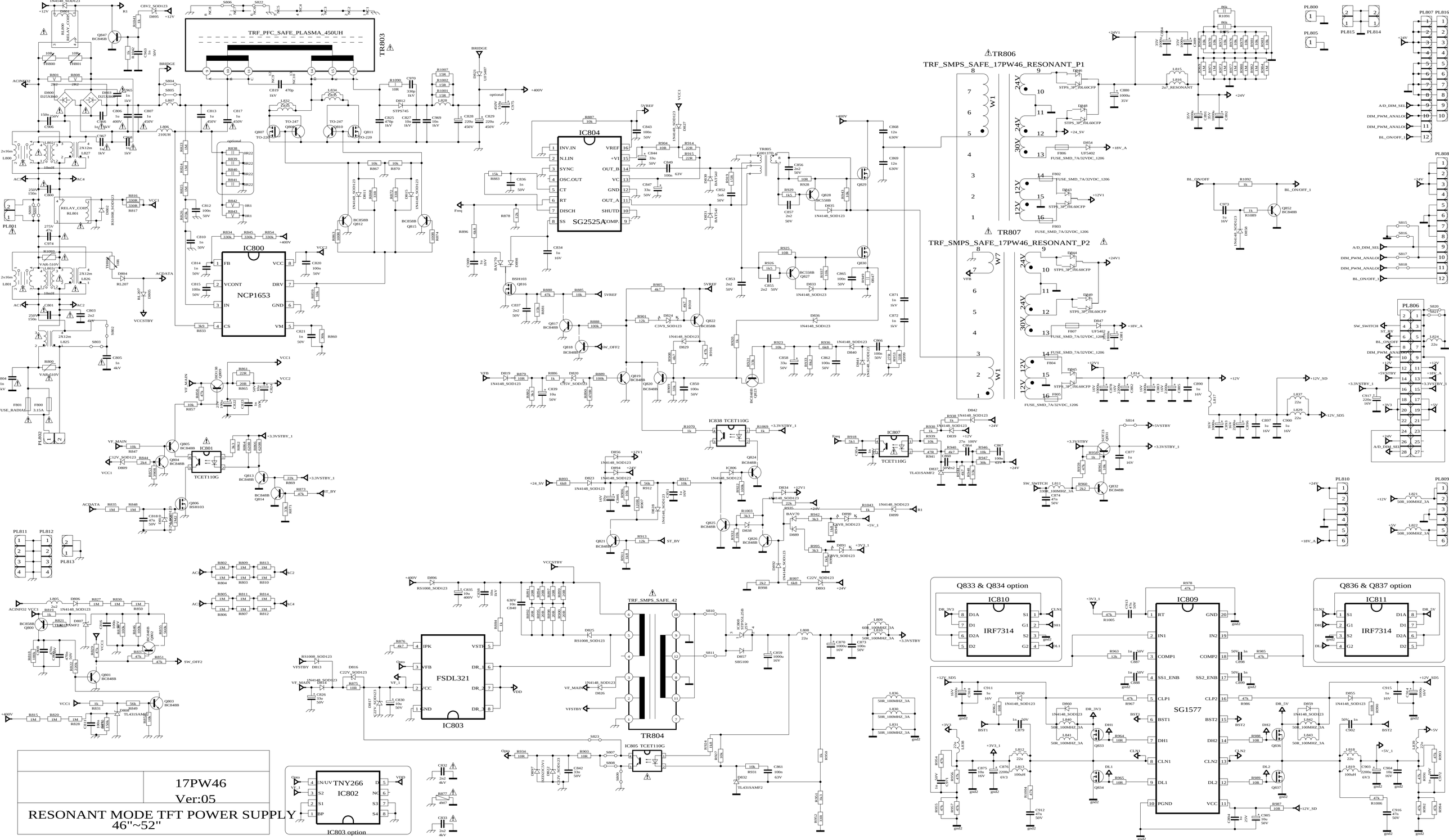

17PW46
Ver:05
RESONANT MODE TFT POWER SUPPLY
46"~52"